The information contained in this drawing is the sole property of CWS Bytemark.
Any reproduction in part or whole without written permission of CWS Bytemark is prohibited.

REVISION HISTORY						
REV	ECN	DESCRIPTION	SIGN & DATE			
			BY	DATE	CHK	DATE
A		PRODUCTION RELEASE	TDK	4/15/05	JLAU	4/15/05

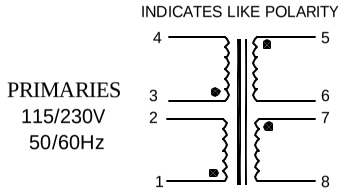

SCHEMATIC

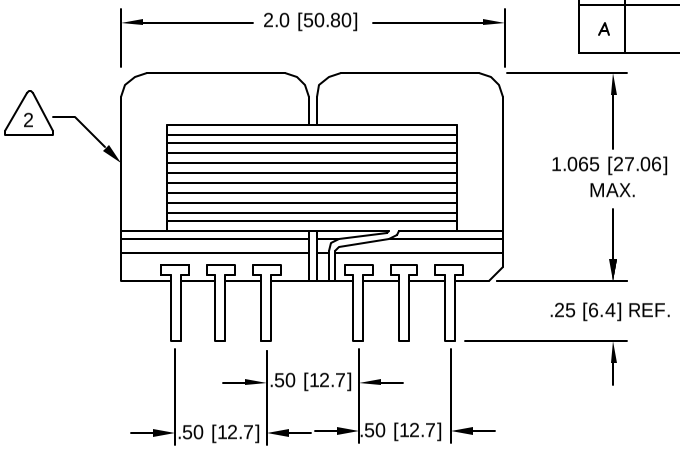

FRONT VIEW

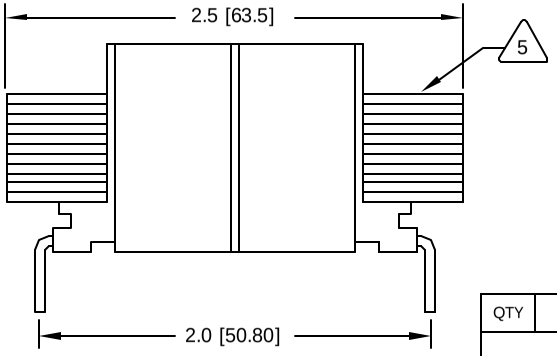

SIDE VIEW

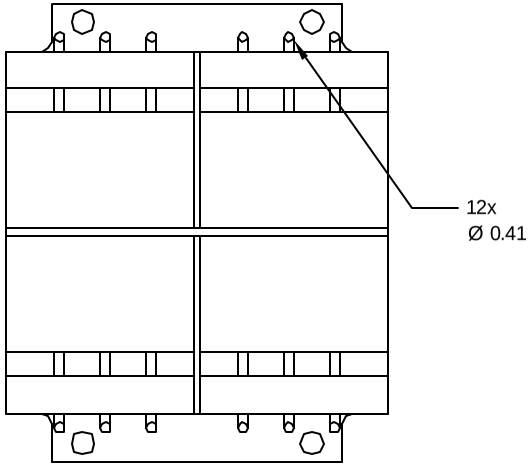

BOTTOM VIEW

5 WHERE SHOWN, USING A PERMANENT MARKING METHOD MARK PART NUMBER AND REVISION

CONTACT CWS FOR MORE INFORMATION
BUT NOT CERTIFIED OR TESTED BY THESE AGENCIES
DESIGNED TO MEET UL, CSA, TUV STANDARDS,
CONCENTRIC CONSTRUCTION

4 CONSTRUCTION:

PRIMARY INPUT VOLTAGE (2+3) = 230 VAC, 50/60 Hz
PRIMARY INPUT VOLTAGE (1+3, 4+2) = 115 VAC, 50/60 Hz
PARALLEL CONNECTION (5+7, 6+8) = 44V @ 260 mA
SERIES CONNECTION (6+7) = 88V C.T. @ 130 mA
SECONDARY RMS RATING :-
VOLT-AMPERES RATING = 12 VA

3 SPECIFICATIONS @ 25°C

WIRE: UL RECOGNIZED 130°C RATED MAGNET WIRE
CWS BYTEMARK OR OTHER APPROVED PART

2 CORE: 50 Hz / 60 Hz LAMINATION

BOBBIN RATING CLASS B (130°C) REQUIRED

1 MATERIAL: UL RECOGNIZED 94V-0 FOR FLAMMABILITY

NOTES: UNLESS OTHERWISE SPECIFIED.
READ NOTES FROM BOTTOM TO TOP

QTY	CODE IDENT	MFG. P/N	DESCRIPTION	ITEM NO.
PARTS LIST				

UNLESS OTHERWISE SPECIFIED
DIMENSIONING AND TOLERANCE PER ANSI Y14.5M
ALL DIMENSIONS ARE IN INCHES AND [MILLIMETERS].
TOLERANCE INCHES: .XXX=±.005 .XX=±.015 ∢=±0°30'
TOLERANCE METRICS: .XXX=±.127 .XX=±.38 ∢=±0°30'
ANGLE PROJECTION
DO NOT SCALE DRAWING

AUTOCAD	X	
SOLIDWORKS		
SIGN		DATE
DRAWN	TDK	4/15/05
CHKD	JLAU	4/15/05
ENGR.	KSUM	4/15/05
APPR.	JLAU	4/15/05

CWS Coil Winding Specialist
1510 E. Edinger Ave. Unit B, Santa Ana, CA 92705

TITLE: Power Transformer
EPL Series, 12VA, 1.065" High

SIZE B | DWG. NO. EPL-12-88 | REV A

SCALE 2=1 | SHEET 1 OF 1

EP FORM0005 REV 3 10/01

CAD-FILE: